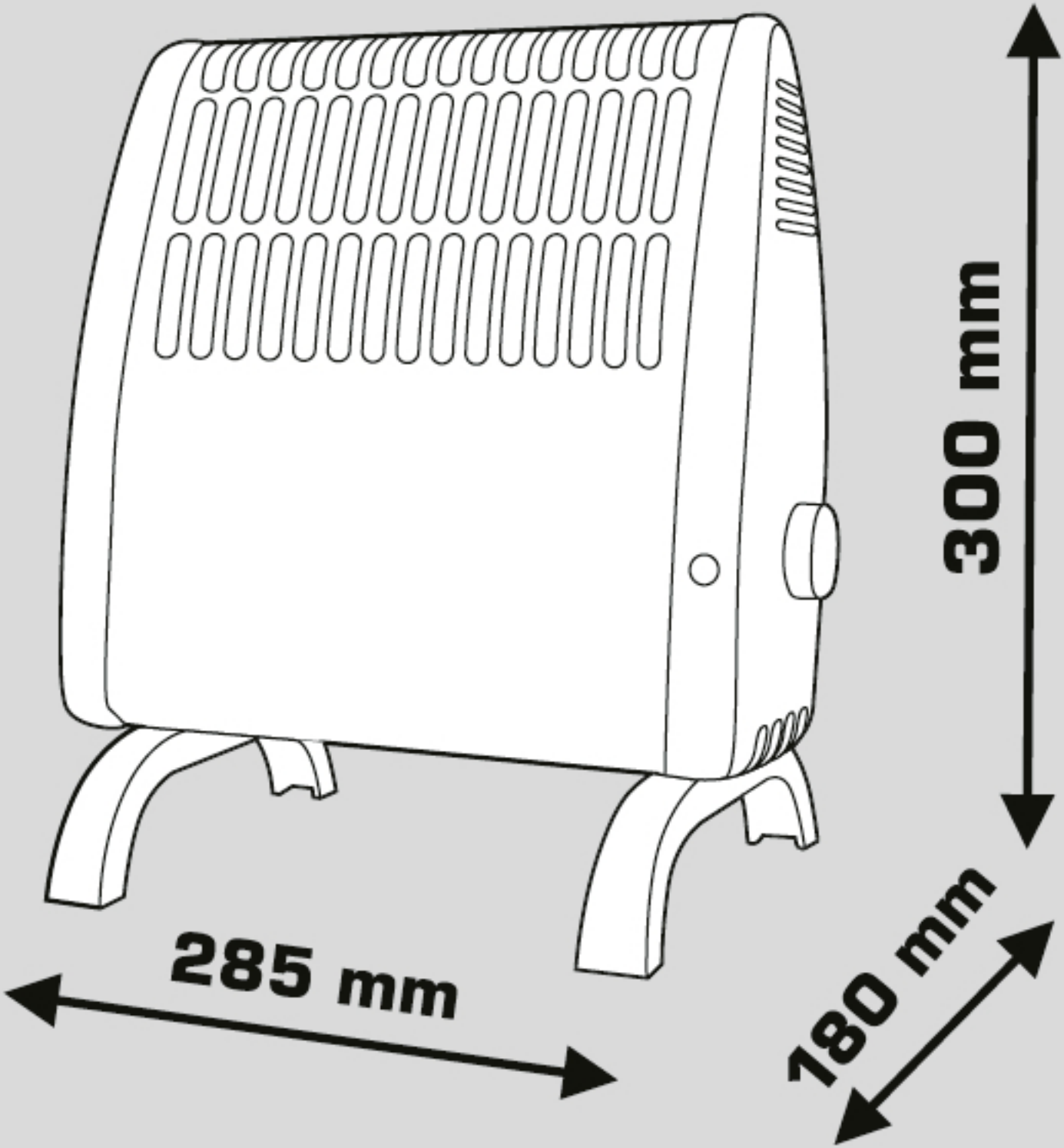
300 mm
285 mm
180 mm